Hosiden Besson Ltd.

Banshee Excel

IS62 Iss B

Specification.

Termination:	Screw terminals for 0.28mm² to 2.5mm² wire conductor
Operating Voltage Range:	9-30VDC*
EN54-3 Voltage Range:	24VDC (20VDC to 28VDC)
Not Used	Switch 6
Current Consumption:	See Sound output table.
Operating Temperature:	-25°C to +70°C
Synchronisation:	Synchronised start.
Environment Category:	Type A – Shallow Base IP45. Type B – Deep Base IP66.
Second Tone:	Connect *terminal to –ve.
Case Material:	ABS.

{ Units meet minimum requirements of IP21C Shallow Base and IP33C Deepbase in accordance with EN54-3 }

Installation Details.

• ALL INSTALLATION TO BE CARRIED OUT BY A COMPETENT PERSON.

IP66 Deep Base Moulding (weatherproof).

• To maintain IP rating when using a Deep Base, use wall mounting bracket Part Number: MM08728. Do not drill fixing holes in deep base. Use suitably rated 20mm cable glands to fit cables or conduit via side knock-outs. Fit 'O'-Ring seal between lens and base.

Non-IP66 Deep Base.

• Knock out the conduit/cable gland holes in side of deep base.
• Fit conduit or 20mm cable glands then screw the base to the mounting surface or BESA box.

Shallow Base Moulding.

• Drill mounting holes in the bottom of Base for screw fixings.
• Route cable through rear hole or side knock-outs.
• Screw the base to the mounting surface or BESA box.

All fixings.

• Connect unit as shown in connection details (Left).
• Place the Banshee Excel onto the base and turn clockwise to retain.
• To remove the Banshee Excel turn unit counter-clockwise.
• Where applicable, fit the security screw through the hole in the side of the lens assembly

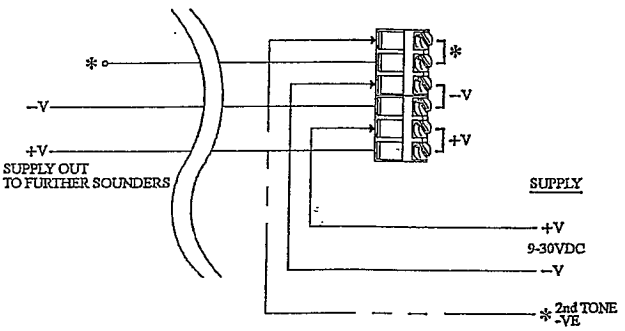

Connection Details

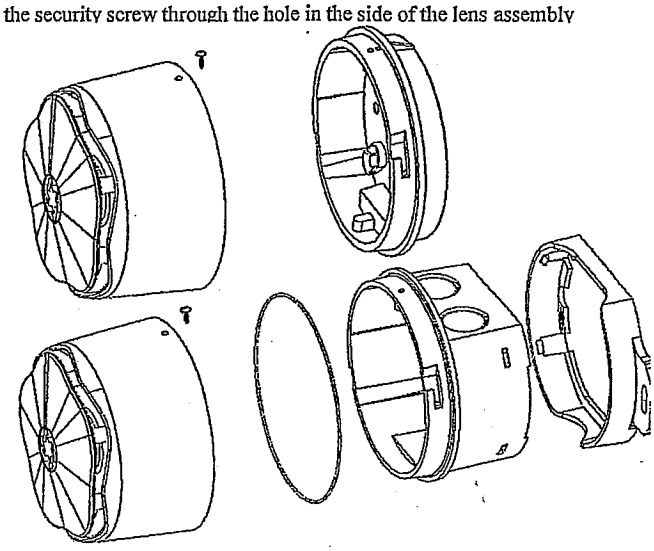

Sound Output Table

No	Sound Frequencies & Patterns	2nd Tone	Code 12345	Description	EN54-3 28Vdc see notes	Typ SPL@1m on axis 12V	Typ SPL@1m on axis 24V	Typ Current mA 12V	Typ Current mA 24V
1	800Hz to 950Hz swept at 120Hz	4	00000	Banshee Buzz LF		94	101	6	12
2	800Hz to 950Hz swept at 9Hz	4	10000	Banshee Fast Sweep LF	98	94	101	6	12
3	800Hz to 950Hz swept at 3Hz	4	01000	Banshee Slow Sweep LF		94	101	6	12
4	Continuous at 900Hz	4	11000	Banshee Continuous LF		94	101	6	12
5	830Hz to 970Hz swept at 9Hz	4	00100	Banshee Fast Sweep LF (New)		95	101	6	12
6	800Hz to 970Hz swept at 1Hz	7	10100	Medium Sweep LF	98	96	101	6	12
7	Continuous at 950Hz	7	01100	Continuous LF		96	102	6	13
8	Intermittent at 950Hz 1 sec on, 1 sec off	4	11100	Back Up Alarm LF		96	102	8	14
9	Alternating 800Hz/1000Hz at 1Hz	4	00010	Alternate LF		94	100	6	13
10	800Hz to 1000Hz swept at 0.5 secs	4	10010	Medium Sweep LF		95	101	6	12
11	Alternating Tones 800/950Hz at 3Hz	4	01010	Alternate LF		96	101	6	12
12	2400Hz to 2900Hz at 120Hz	15	11010	Banshee Buzz HF		102	110	16	35
13	2400Hz to 2900Hz at 9Hz	15	00110	Banshee Fast Sweep HF		103	110	17	35
14	2400Hz to 2900Hz at 3Hz	15	10110	Banshee Slow Sweep HF		103	110	17	35
15	Continuous 2900Hz	15	01110	Banshee Continuous HF		103	110	19	39
16	2450Hz to 3100Hz swept at 9Hz	15	11110	Banshee Fast Sweep HF (New)		103	110	18	36
17	Intermittent at 2900Hz 1 sec on, 1 sec off	15	00001	Back Up Alarm HF		104	110	18	36
18	Alternating Tones 2400/2900 at 3Hz	15	10001	Alternate HF		104	110	16	36
19	500Hz rising to 1200Hz over 3.5 sec, silence 0.5 sec	4	01001	Slow Whoop	98	95	101	6	12
20	1200Hz falling to 500Hz over 1 sec, silence 10mS	4	11001	Din Tone (DK)	97	93	100	5	10
21	554Hz for 100mS and 440Hz for 400mS	4	00101	French Fire Sounder	93	90	96	4	7
22	420Hz repeating 0.625 sec on, 0.625 sec off	4	10101	Australian Alert Signal		89	95	3	6
23	500Hz to 1200Hz sweeping, 3.75 secs on, 0.25 secs off	4	01101	Australian Evacuation Signal		95	103	6	12
24	950Hz for 0.5 sec on, 0.5 sec off for 3 phases, silence for 1.5 secs	4	11101	US Temporal Tone LF		95	101	5	10
25	2900Hz for 0.5sec on, 0.5sec off for 3 phases, silence for 1.5 sec	15	00011	US Temporal Tone HF		104	110	13	26
26	Intermittent 660Hz 150mS on, 150mS off	26	10011	Swedish Tone (Fire)		90	96	3	6
27	Continuous 660Hz	27	01011	Swedish Tone (All Clear)		91	97	5	9
28	Intermittent 970Hz 500mS on, 500mS off	28	11011	ISO8201 LF		93	99	5	10
29	Intermittent 2900Hz 500mS on, 500mS off	29	00111	ISO8201 HF		103	110	13	27
30	Yodel 800Hz/1000Hz, 0.25sec	31	10111	BT Banshee (FP1063,1)		93	100	6	12
31	Continuous 1000Hz	31	01111	BT Banshee (FP1063,1)		90	96	6	14
32	Bell Tone	32	11111	Bell Tone		96	101	12	25
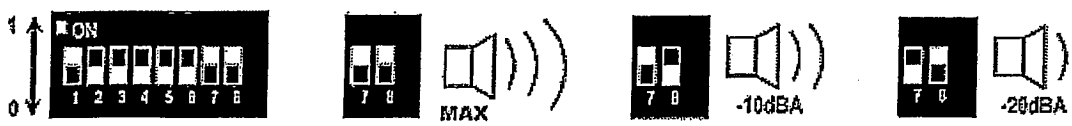
- Volume control providing up to 20dB attenuation. All Frequency are nominal.
- Column EN54-3 shows tones approved under the Construction Product Directive.
- EN54-3 output shown is the minimum expected SPL at the loudest point around the EN54-3 defined sounder axis when volume is set to maximum on a shallow base.
- Polar diagram Information is available in the technical manual 9000199MD available on request.
- Specifications shown with a «*» have not been verified to be EN54-3 compliant.